SKANDI lasiovi / glasdörr / glass door (2.4m)
-asennusohjeet / -montering / installation manual

helaform®

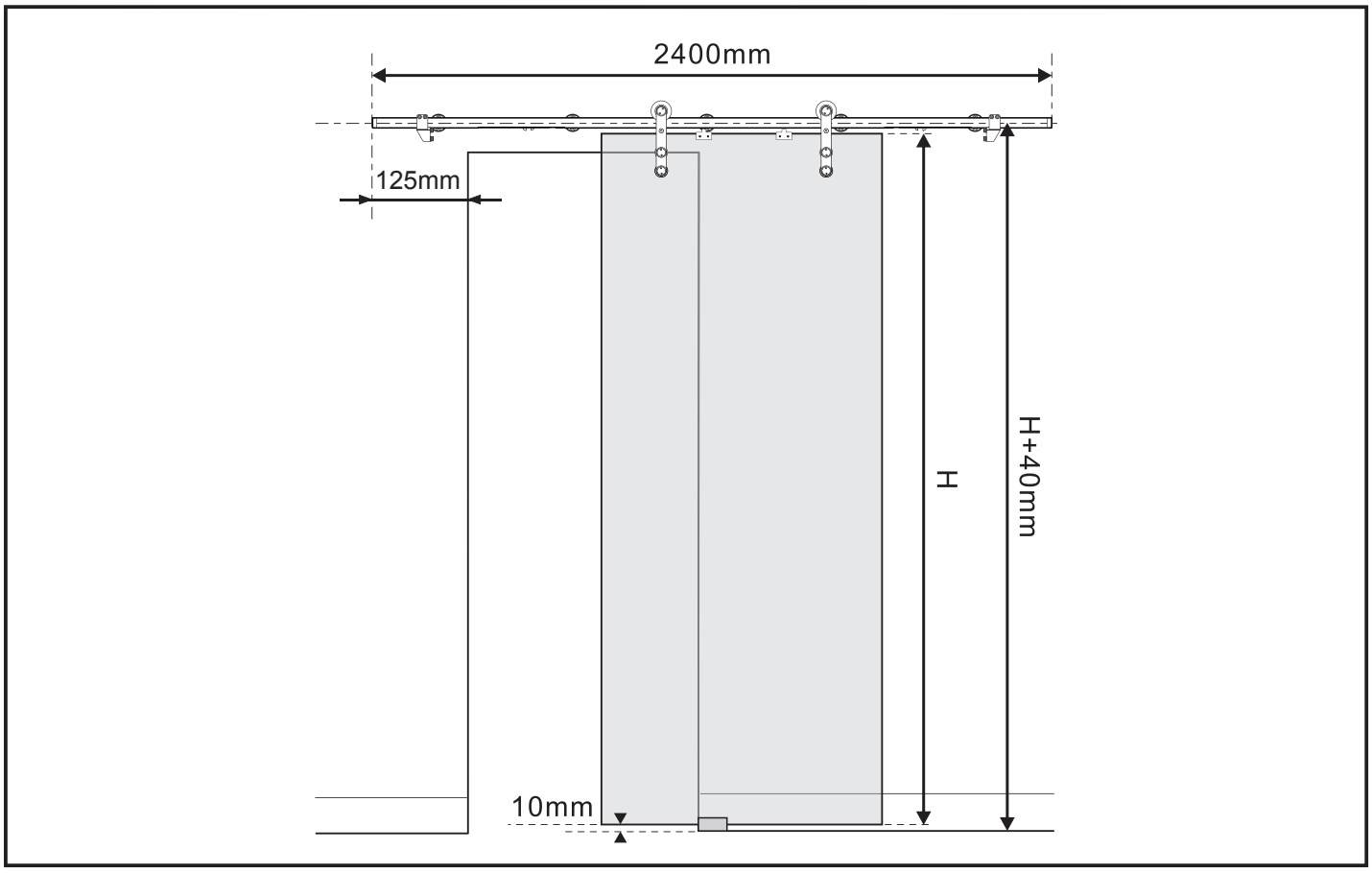

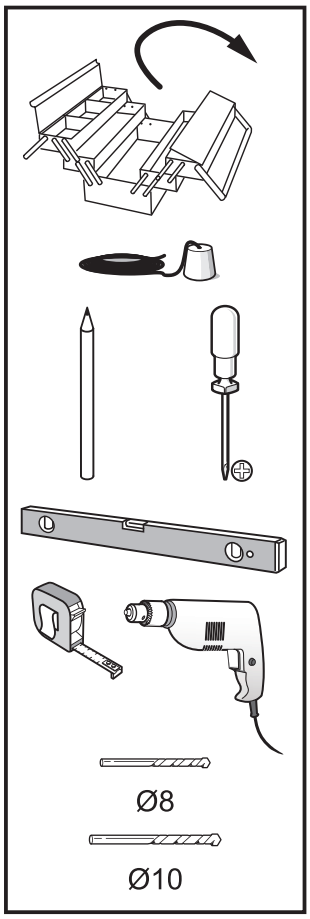

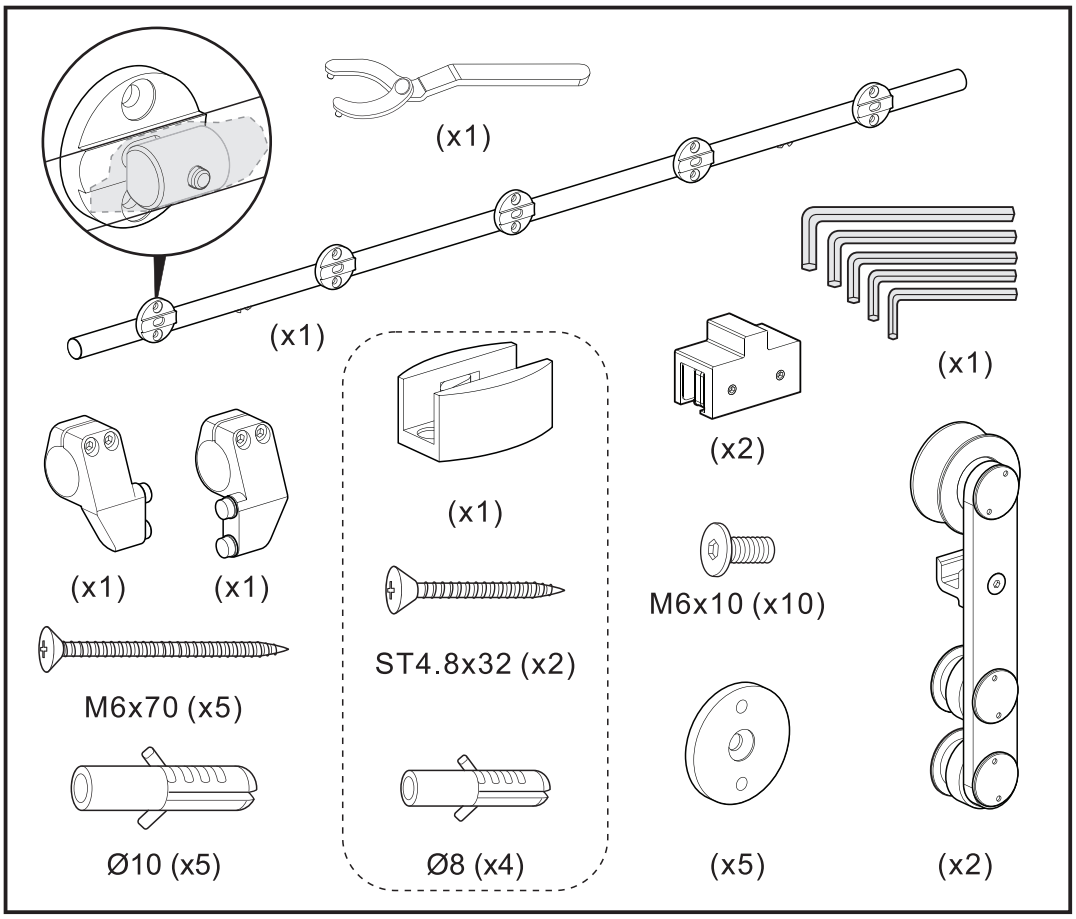

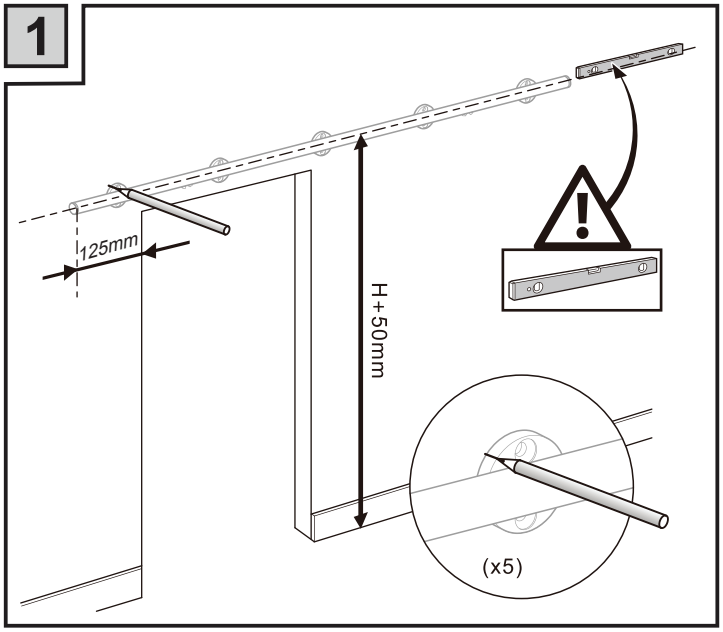
1
125mm
H + 50mm
(x5)

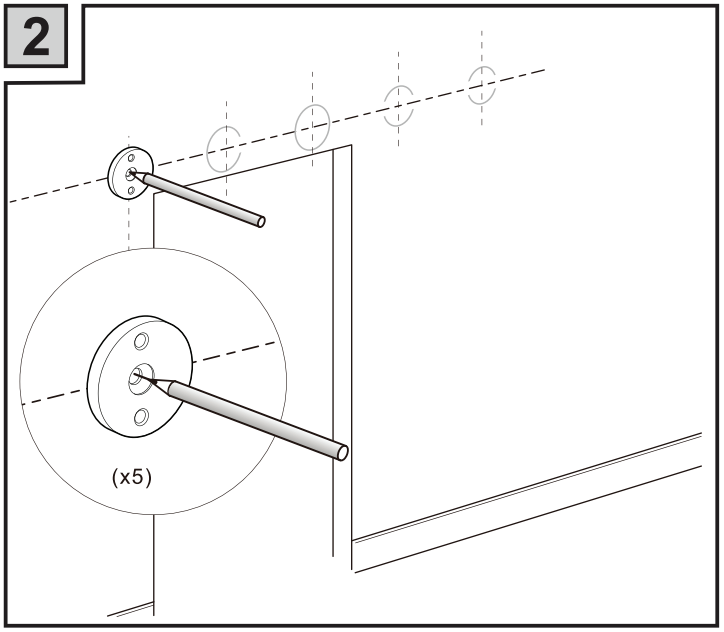
2
(x5)

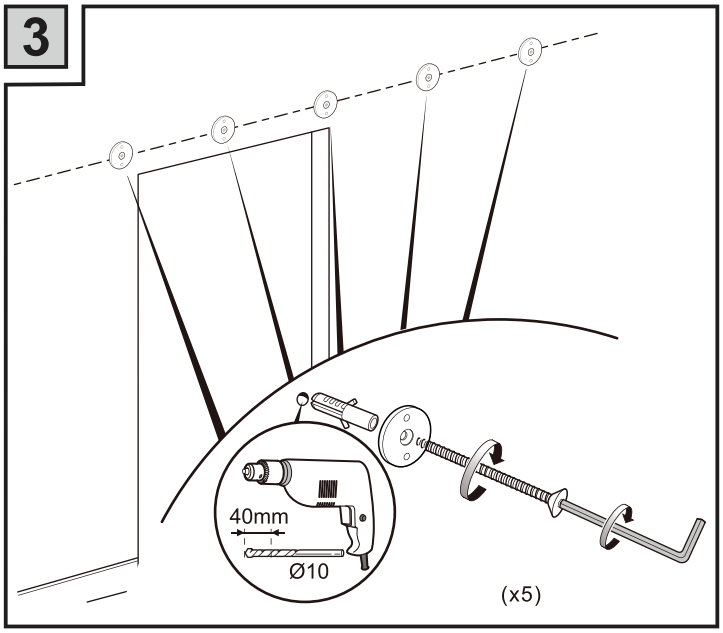
3
40mm
Ø10
(x5)

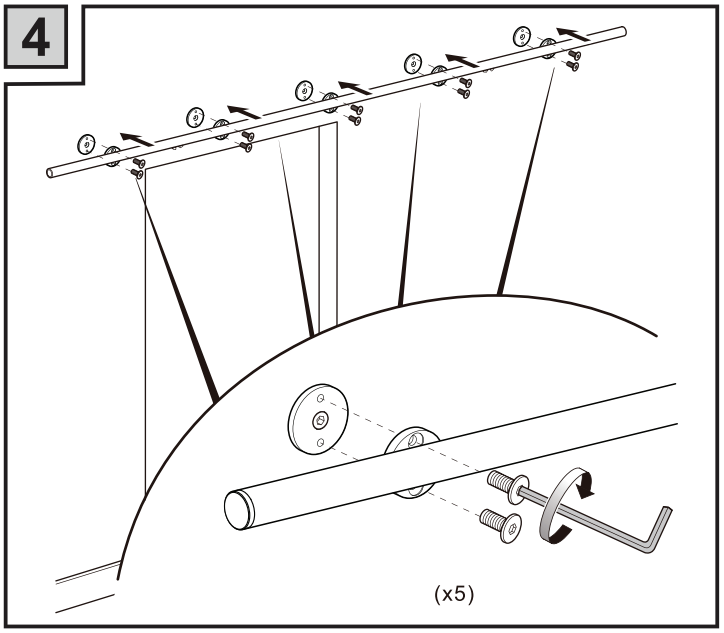
4
(x5)

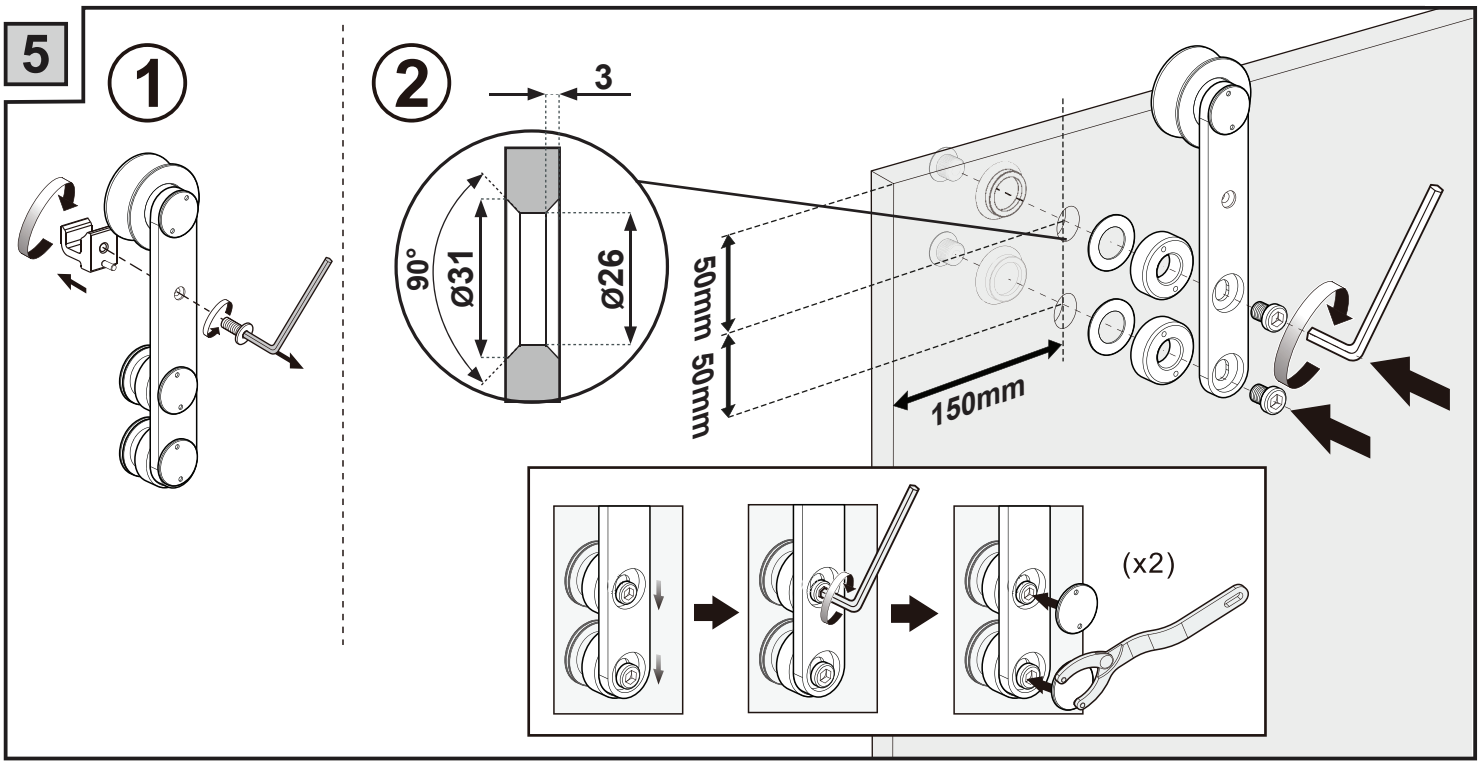
5
1
2
3
90°
Ø31
Ø26
50mm
50mm
150mm
(x2)

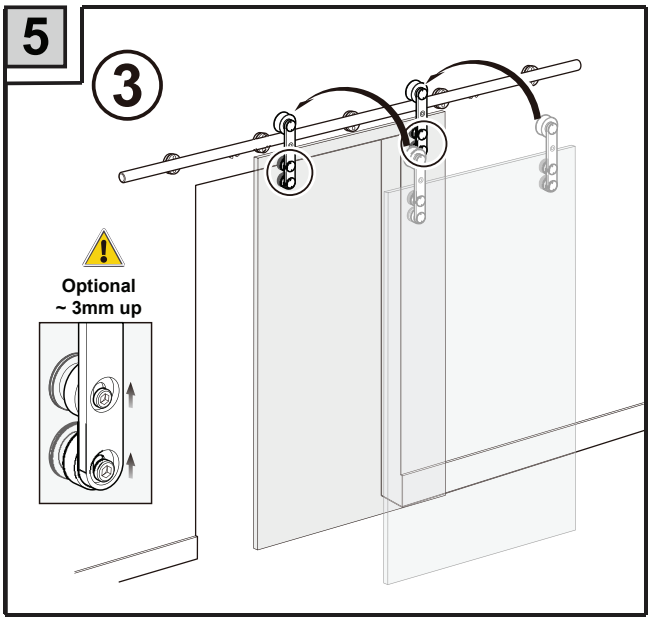
5
3
Optional
~ 3mm up

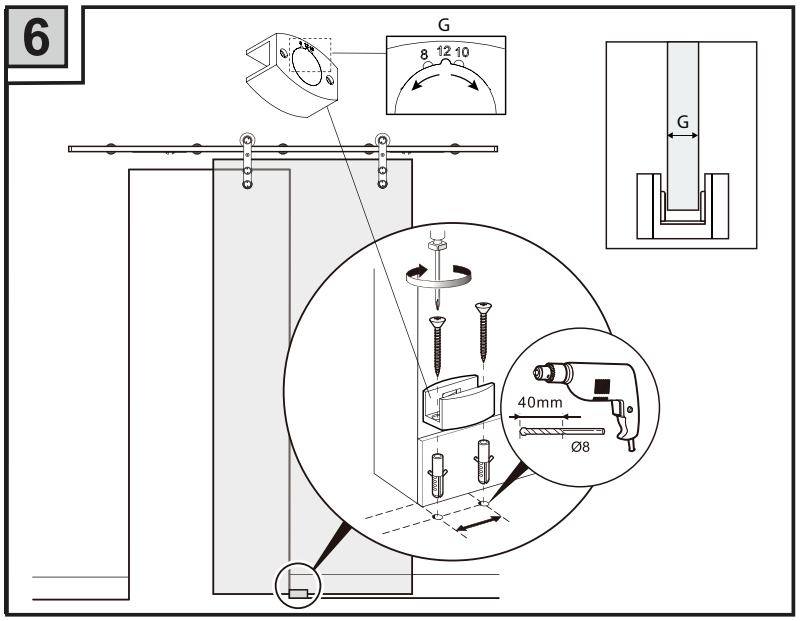
6
G
8 12 10
G
40mm
Ø8

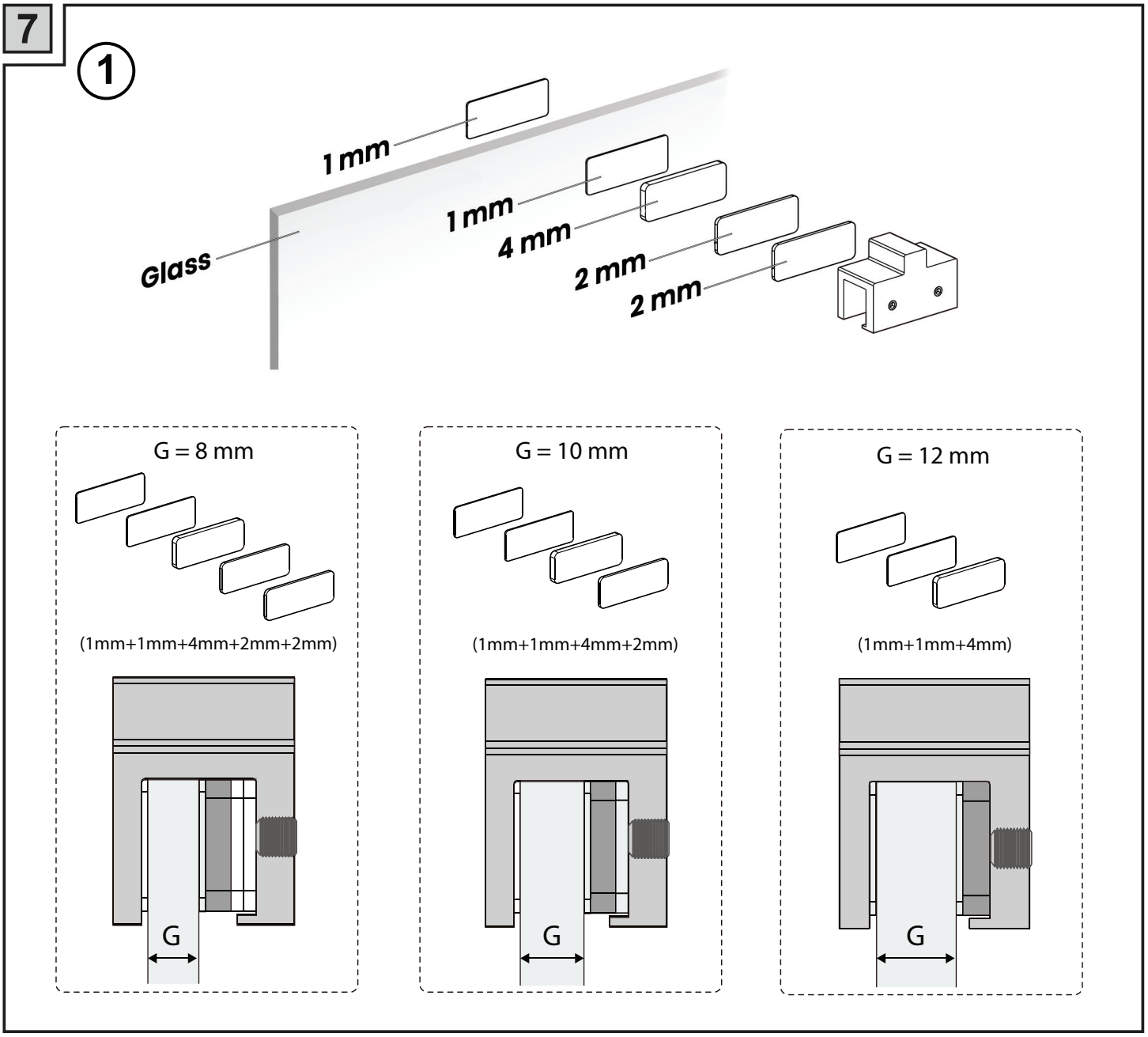
7
1
1 mm
1 mm
4 mm
2 mm
2 mm
Glass
G = 8 mm
(1mm+1mm+4mm+2mm+2mm)
G
G = 10 mm
(1mm+1mm+4mm+2mm)
G
G = 12 mm
(1mm+1mm+4mm)
G

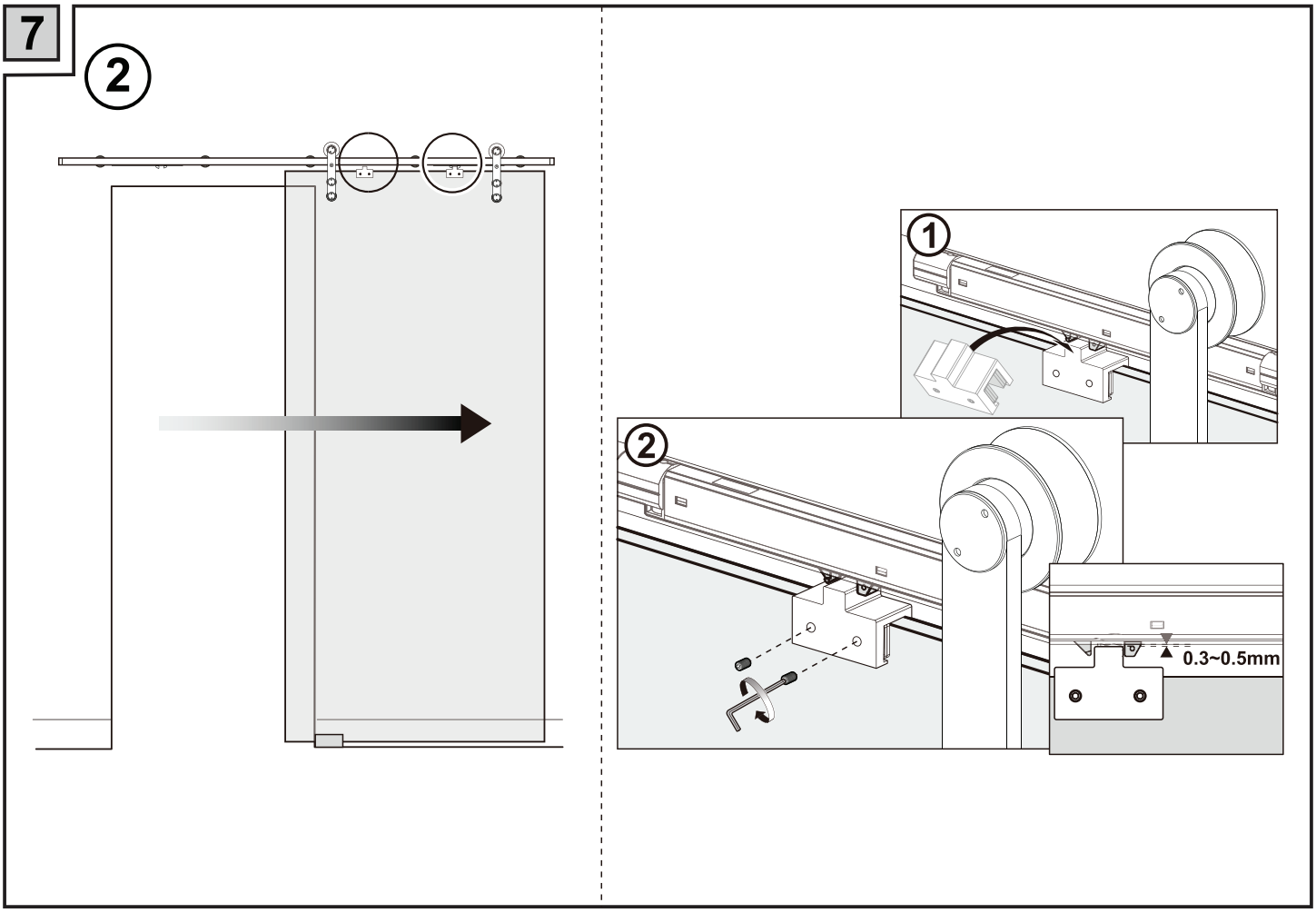
7
2
1
2
0.3~0.5mm

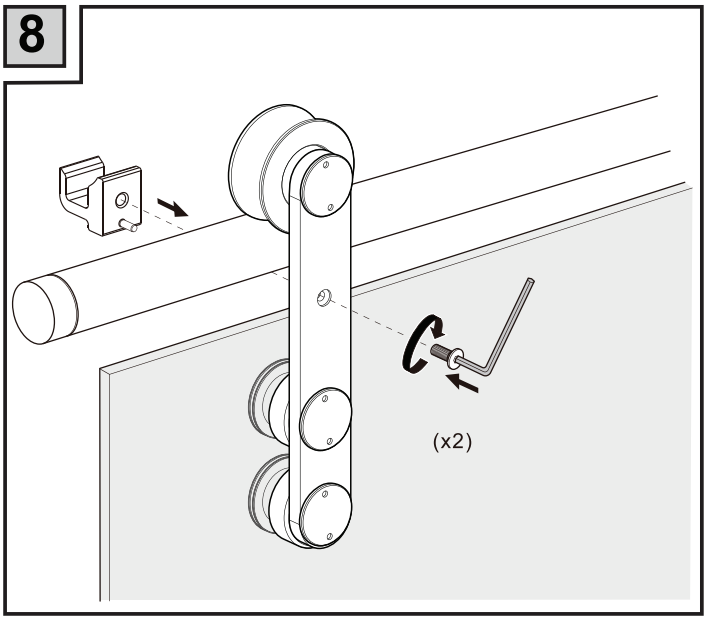
8
(x2)

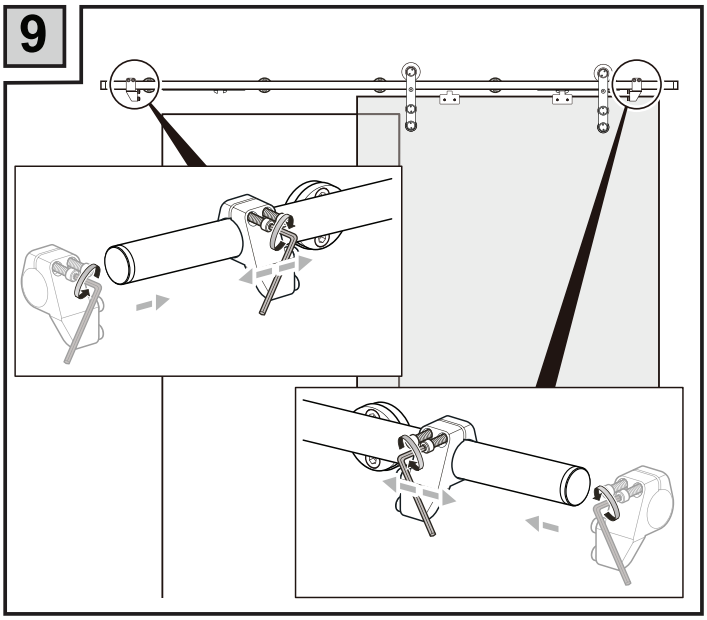
9