SKANDI lasiovi / glasdörr / glass door (2m)
-asennusohjeet / -montering / installation manual

helaform®

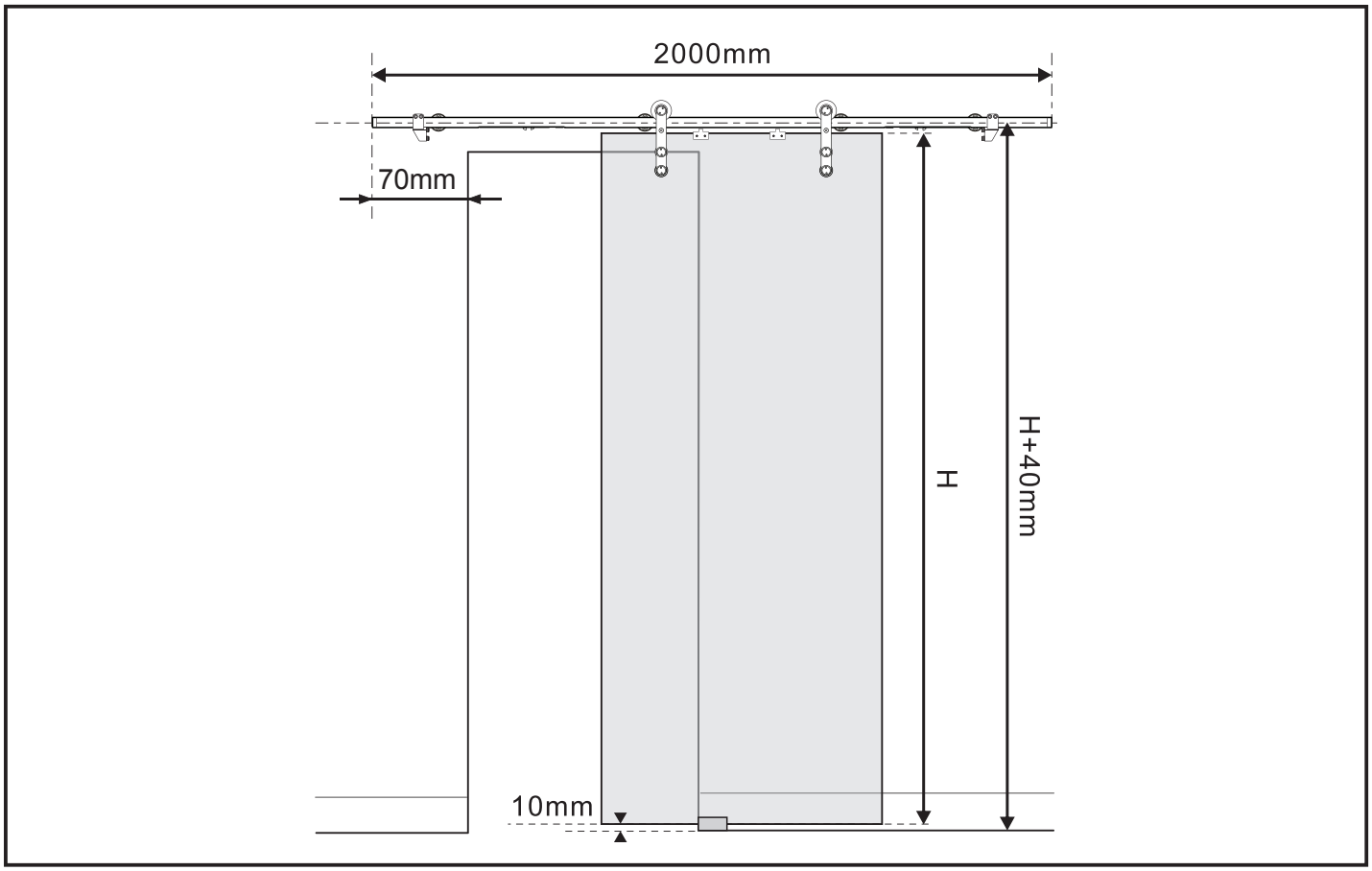

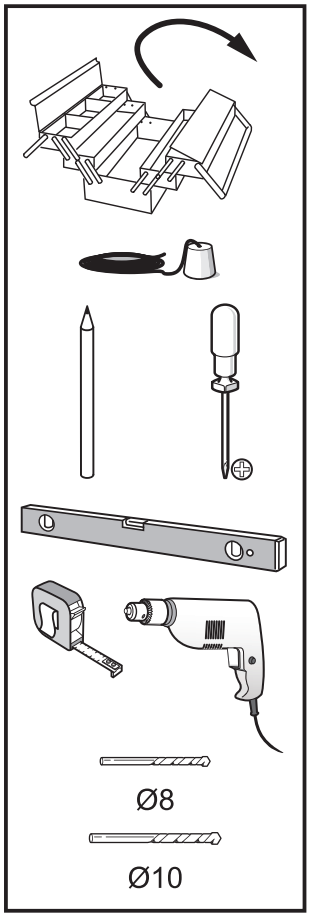

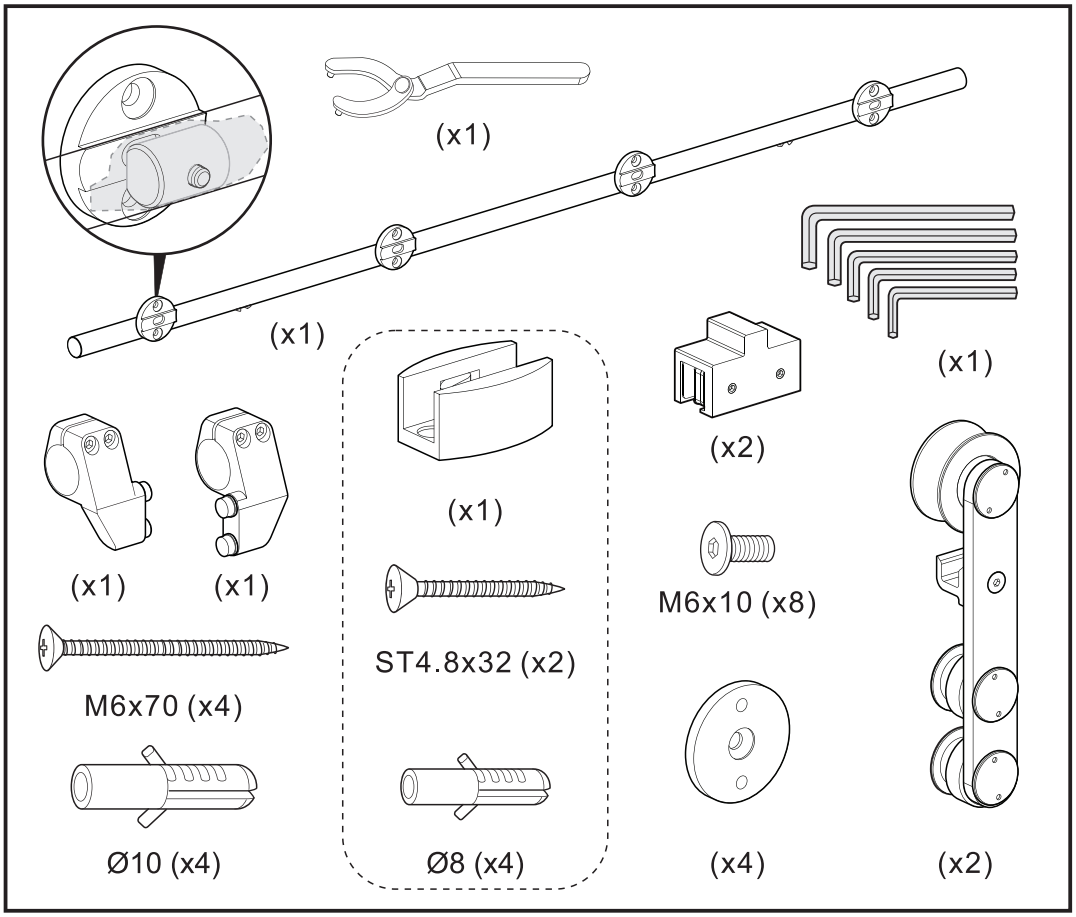

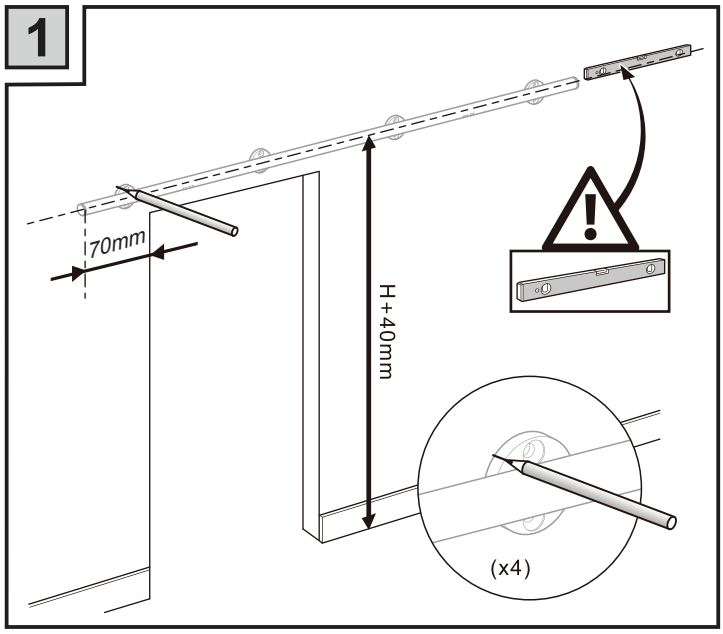
1
70mm
H+40mm
(x4)

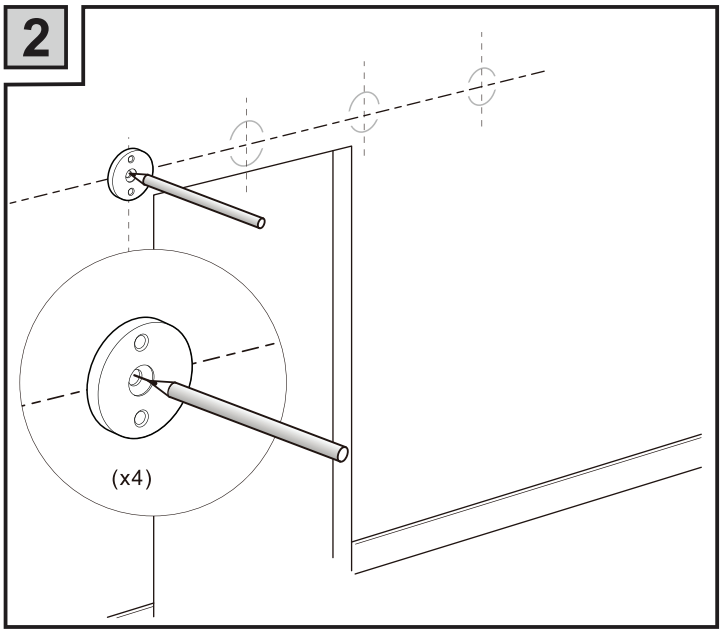
2
(x4)

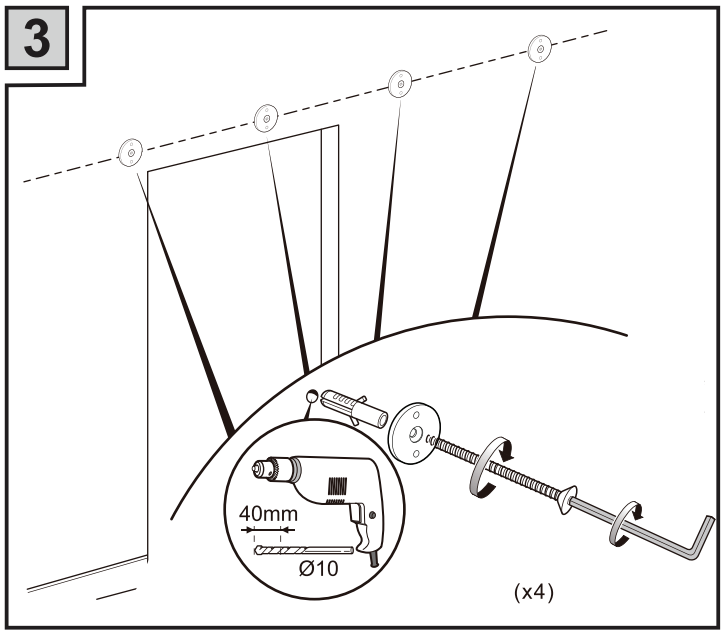
3
40mm
Ø10
(x4)

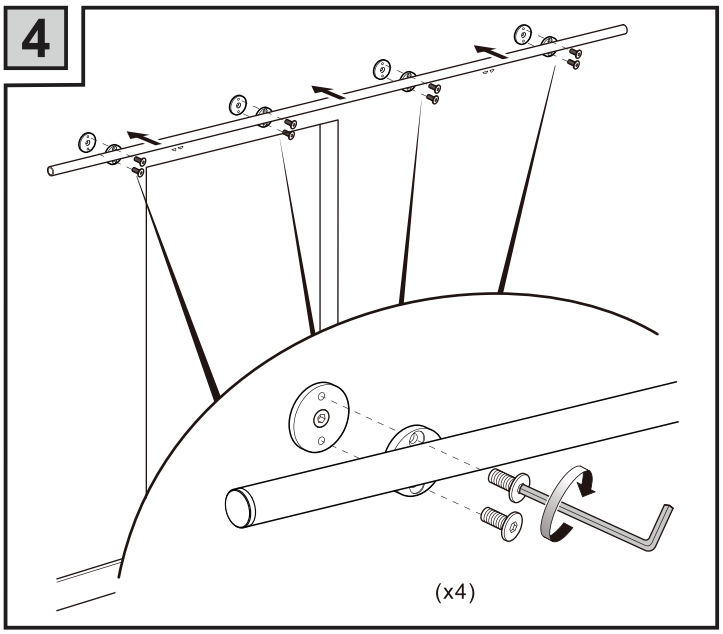
4
(x4)

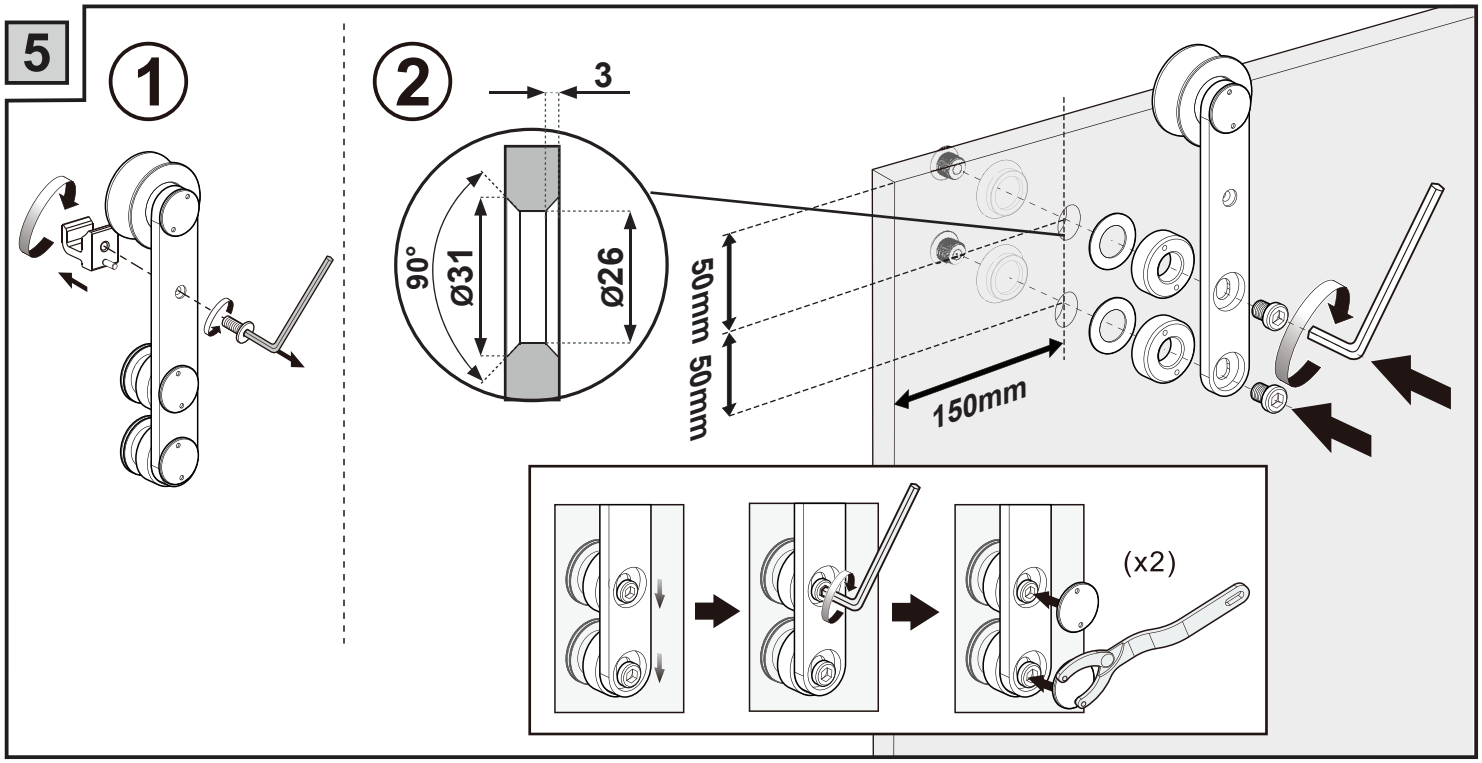
5
1
2
3
90°
Ø31
Ø26
50mm
50mm
150mm
(x2)

5

3

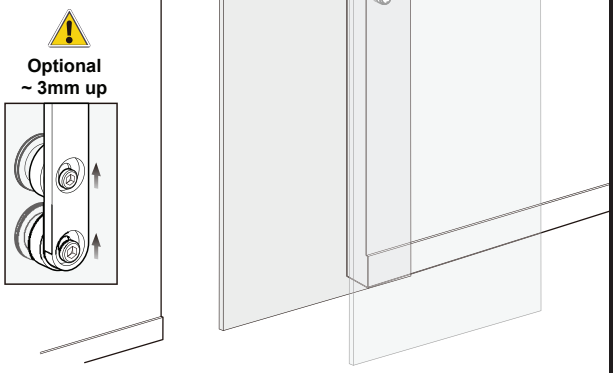

6

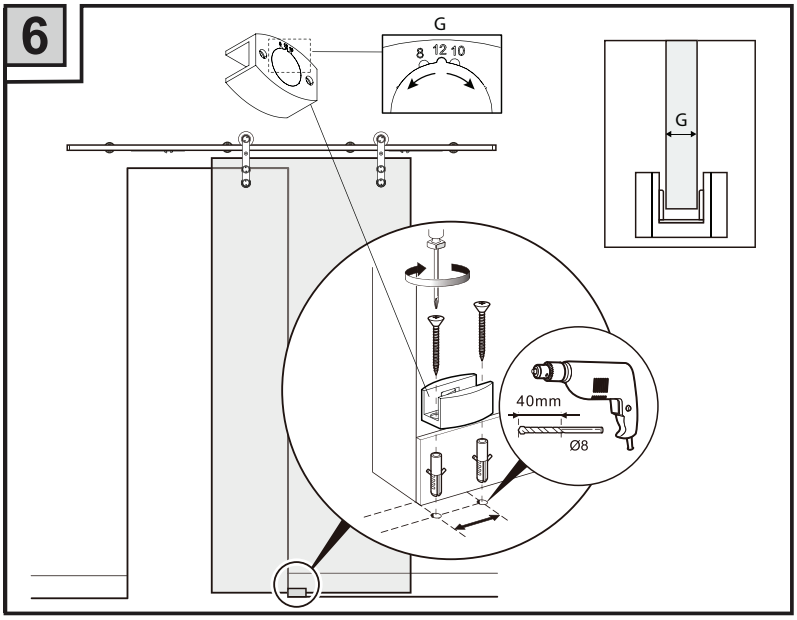

7

1

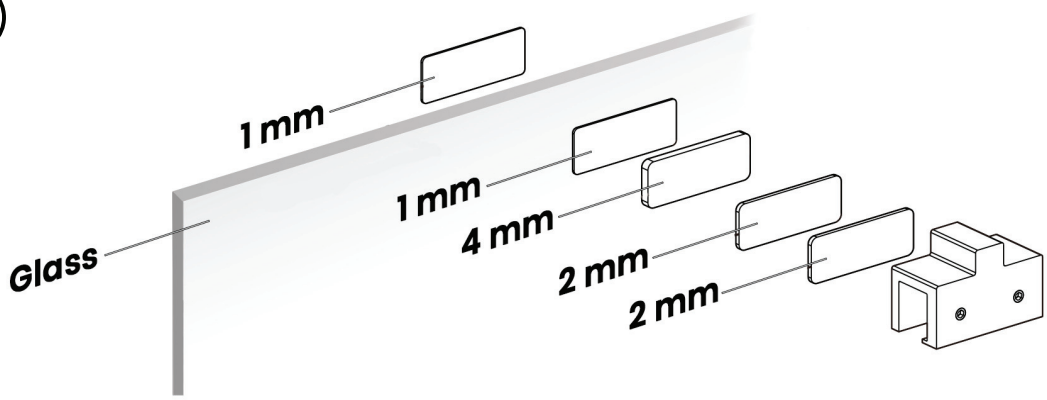

G = 8 mm

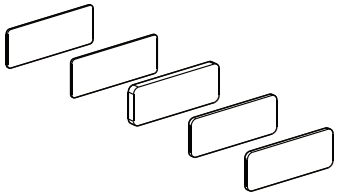

(1mm+1mm+4mm+2mm+2mm)

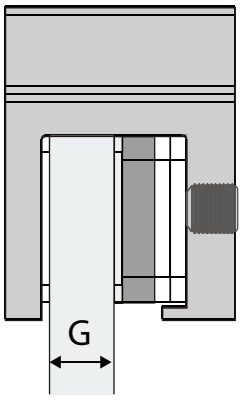

G = 10 mm

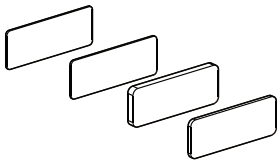

(1mm+1mm+4mm+2mm)

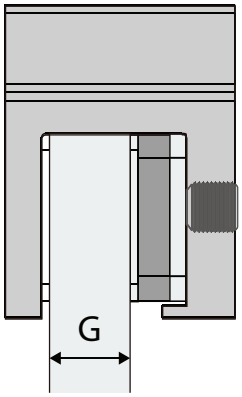

G = 12 mm

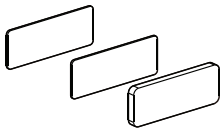

(1mm+1mm+4mm)

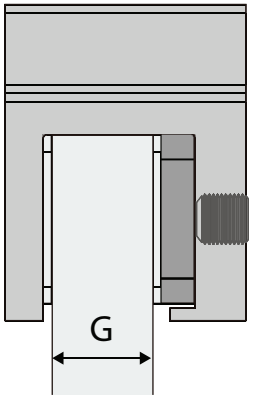

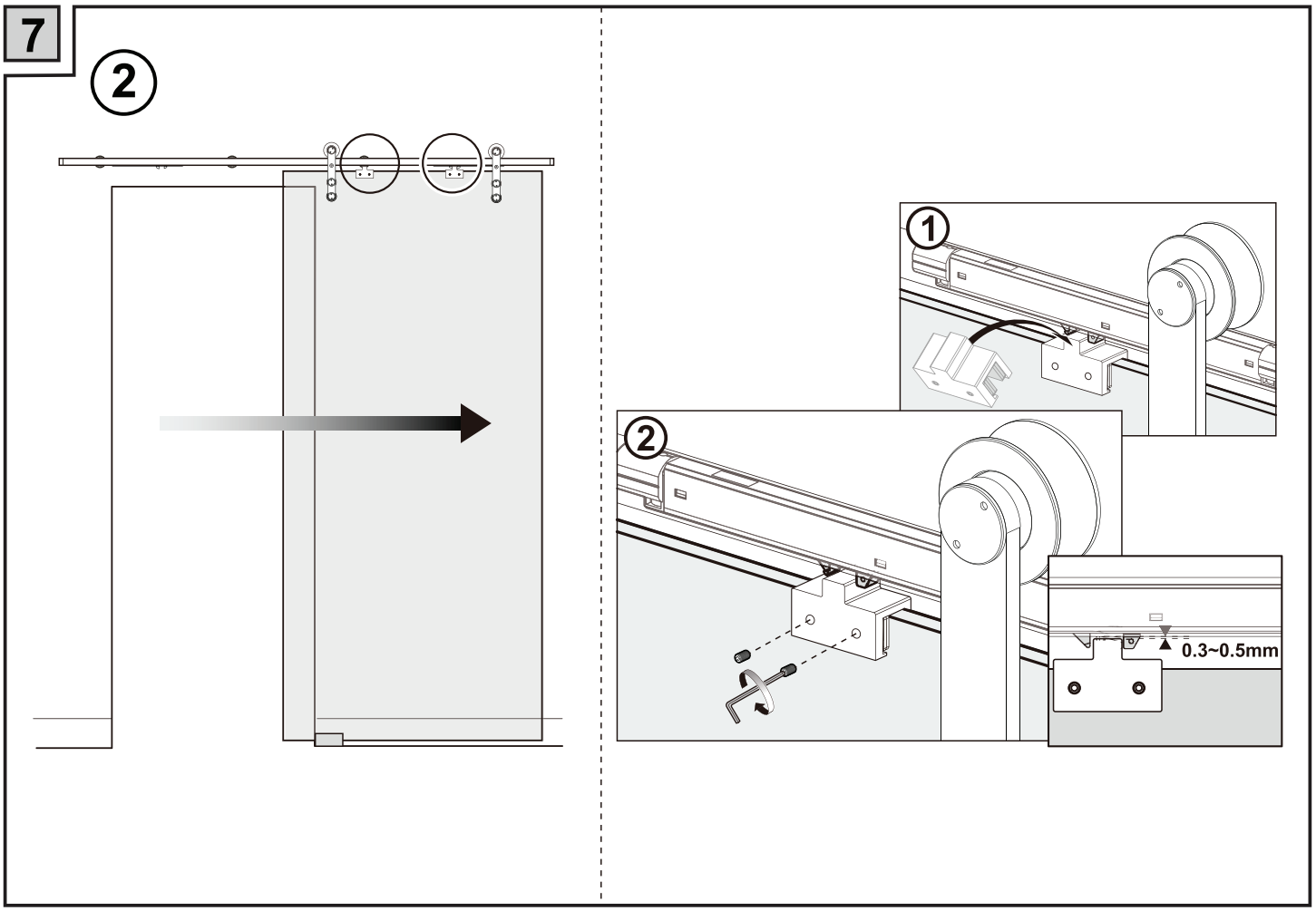
7
2
1
2
0.3~0.5mm

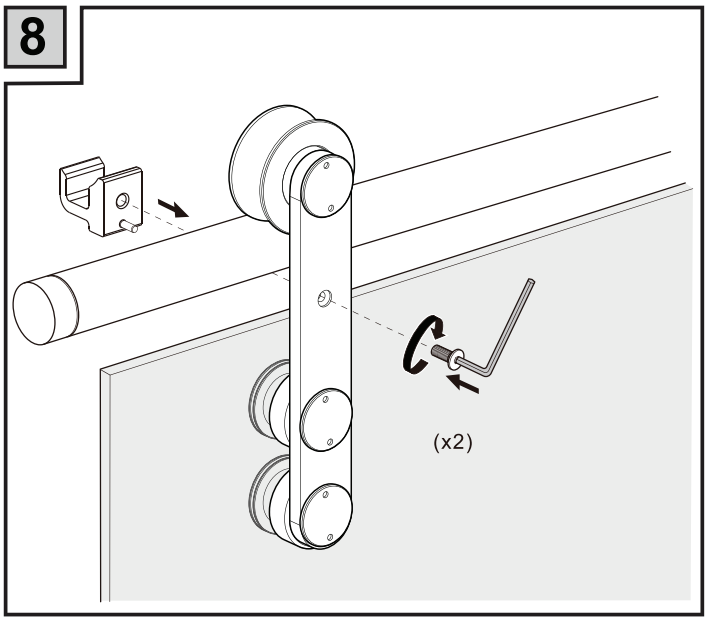
8
(x2)

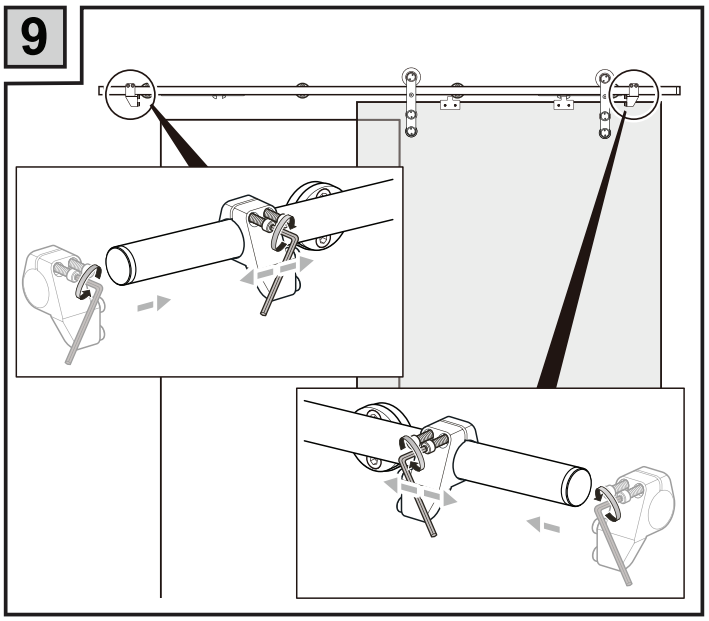
9